University of Baghdad
College of Engineering
Civil Engineering Department

FLUID MECHANICS

Second Year Class
Date: June, 2013
Time: 3 Hours
First Attempt

NOTE: ATTEMPT FIVE QUESTIONS ONLY

Q1: a) A trapezoidal channel has side slope of 3 horizontal to 4 vertical and the slope of its bed is 1 in 2000 as shown in Fig. A. Determine the optimum dimensions of the channel, if it is to carry $0.5 m^3/s$. Take Chezy,s constant as 80; **b)** Design the most economical circular pipe section and actual depth of flow for all information above? (16.8 page 883) chand

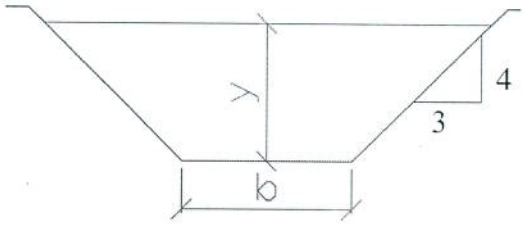

Fig. A

Q2: a) A pipe of diameter 30cm carries water a velocity of 20cm/sec. The pressure at A and B are given as $34.335 N/cm^2$ and $29.43 N/cm^2$ respectively, while the datum head at A and B are 25m and 28m as shown in Fig. B. Find the flow rate, loss of head between A and B and direction of flow? (7-6 page 249)

Q2: b) A rectangular notch 50cm long is used for measuring a discharge of 40 liters per second. An error of 2mm was made in measuring the head over the notch. Calculate the percentage error in the discharge? Take Cd=0.6. (8-31 page 292)

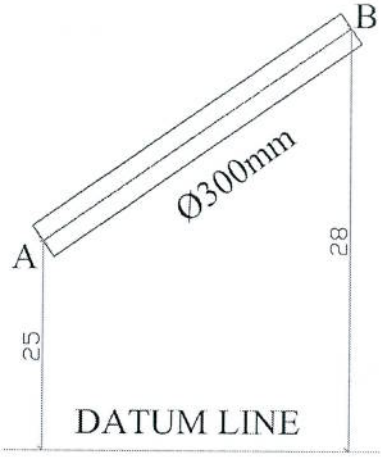

Fig. B

Q3: Two tanks are connected with the help of two pipes in series as shown in Fig. C. The lengths of the pipe are 1000m and 800m whereas the diameters are 400mm and 200mm respectively. The coefficient of friction for both the pipes is 0.008. The difference of water level in the two tanks is 15m. Find the rate of flow of water through the pipes, considering all losses. Also draw the total energy line and hydraulic gradient lines for the system? (9-21 page 363)

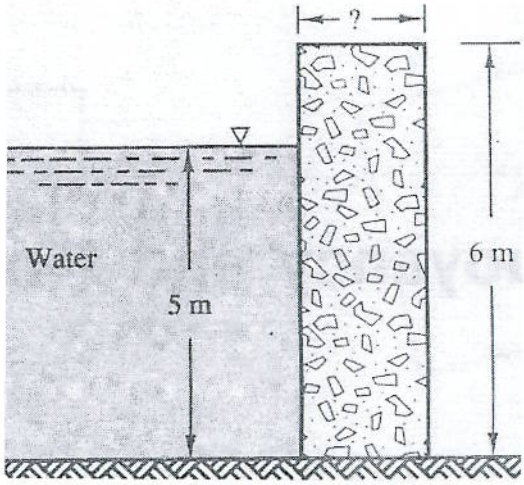

Fig. D

Q4: a) Referring to Fig. D, calculate the width of concrete wall that is necessary to prevent the wall from sliding (sliding factor=1.5). The unit weight of the concrete is (γ=23.6 kN/m^3), and the coefficient of friction between the base of the wall and the foundation soil is 0.42. Use 1.5 as the factor of safety against sliding. Will it also be safe against overturning? (3-49 page 56)

Q4: b) A rectangular pontoon 8m long, 7m broad and 3m deep weighs 588.6kN. It carries on its upper deck an empty boiler of 4m diameter weighing 392.4 kN. The center of gravity of the boiler and the pontoon are at their respective centers along a vertical line as shown in Fig. E. Find the meta-centric height? Weighting density of sea-water is 10104 N/m^3. (4-14 page 144) shcom

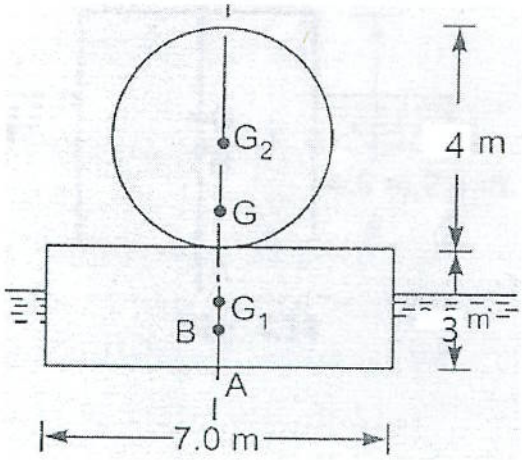

Fig. E

Q5: A pipe of diameter 100mm and length 1000m is used to pump oil of viscosity 0.85 Ns/m^2 and specific gravity 0.92 at the rate $1.2m^3/min$. The first 300m of pipe is laid along the ground sloping upwards 10^0 to the horizontal and the remaining pipe is laid on the ground sloping upwards at 15^0 to the horizontal as shown in Fig. F. a) State whether the flow is laminar or turbulent? b) Determine the pressure to be developed by the pump and the power of the driving motor if the pump efficiency is 65%? (10-18 page 549) chand

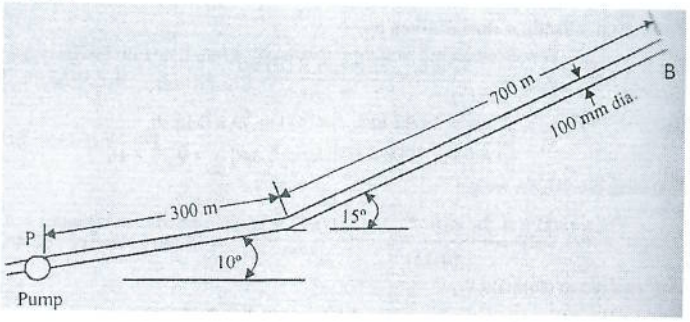

Fig. F

Q6: a) An oil of specific gravity 0.9 is flowing through a venturimeter having inlet diameter 20cm and throat diameter 10cm. The oil-mercury differential manometer shows a reading of 20cm. Calculate the discharge of oil through the horizontal venturimeter? Take cd=0.98. (8-2 page 288)

Q6: b) The resistance R, to the motion of a completely sub-merged body depends upon the length of body L, velocity of flow V, mass density of fluid $\rho$and kinematic viscosity of fluid ϑ. By dimensional analysis prove that ($R = \rho V^2 L^2 \emptyset\left(\frac{VL}{\vartheta}\right)$)?(6-3 page 221)

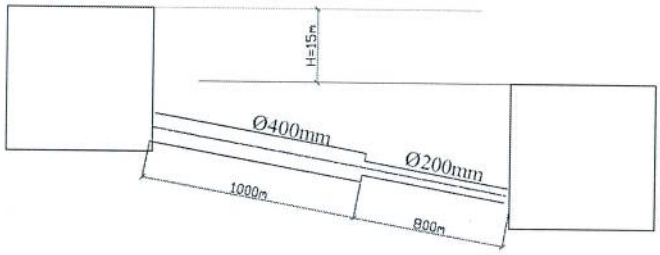

Fig. C

NOTE:

a) Discuss all the results.
b) Each question has the same weight.
c) Question paper should be retaining.
d) Answer five questions only.

GOOD LUCK

Instructors: Dr. Basim H. Al-Obaidy

FLUID MECHANICS FORMULAS

$\rho = \frac{m}{V}, \gamma = \frac{w}{V}, r.d_f = \frac{\rho_f}{\rho_w} = \frac{\gamma_f}{\gamma_w}, \gamma = \rho g, SV = \frac{1}{\rho}, E = -\frac{dp}{\frac{dv}{v_1}}, a = \sqrt{\frac{E}{\rho}}, h = \frac{2\sigma cos\theta}{\gamma r}, \tau = \mu\frac{dv}{dy}, \vartheta = \frac{\mu}{\rho}$

$P = \gamma h, P_1 = P_1 + \gamma h, P_{Gauge} = P_{abs} - P_{atm}, MB = \frac{I}{V}, MG = \frac{I}{V} - BG, \frac{dQ}{Q} = \frac{5}{2} \times \frac{dH}{H}$

$F = \gamma h_c A, \quad h^* = h_c + \frac{I_G}{Ah_c}, F = \sqrt{F_H^2 + F_V^2}, \theta = tan^{-1}\frac{F_V}{F_H}, y_p = \bar{y} + \frac{I_G}{A\bar{y}}, h^* = h_c + \frac{I_G(sin\theta)^2}{Ah_c}$

$p = p_o - \gamma\frac{a_x}{g}x - \gamma\left(1 + \frac{a_y}{g}\right)y, \frac{dp}{dy} = \frac{-a_x}{a_y+g}, p = p_o + \gamma\frac{\omega^2 r^2}{2g} - \gamma y, a_x = gtan\theta, h = \frac{\omega^2 r^2}{2g}, \Delta Q = -\frac{\sum h_f}{\sum\frac{h_f}{Q}}$

$Q = v \times A, \sum Q_{in} = \sum Q_{out}, \frac{P_1}{\gamma} + z_1 + \frac{v_1^2}{2g} = \frac{P_2}{\gamma} + z_2 + \frac{v_2^2}{2g} + h_L \quad Q_T = \sum Q, h_{fT} = h_{f1} = h_{f2}, Q_T = Q_1 = Q_2, h_{fT} = \sum h_f, F.S_{Sliding} = \frac{friction \times w_{Concrete}}{Sliding\ force}, F.S_{Overturning} = \frac{Total\ right\ moment}{Total\ overturning\ moment}$

$v_{th} = \sqrt{2gh}, C_V = \frac{v_{ACT}}{v_{th}}, C_C = \frac{A_{ACT}}{A_{th}}, C_d = \frac{Q_{ACT}}{Q_{th}}, Q_{ACT} = C_d \times Q_{th}, v = \sqrt{2gh \times \frac{a_1^2}{a_1^2 - a_2^2}},$

$Q_{th} = \frac{a_1 \times a_2}{\sqrt{a_1^2 - a_2^2}}\sqrt{2gh}, x = v_x t, y = v_{y0}t + \frac{1}{2}gt^2, v_y = v_{y0}t + gt, v = v_c\left(1 - \frac{r^2}{R^2}\right),$

$P_{wp} = \gamma Q H_p, P_{wT} = \gamma Q H_T, \eta_P = \frac{P_{wP}}{P_{EP}}, \eta_T = \frac{P_{ET}}{P_{wP}}, \rho_w = 1000\frac{kg}{m^3}, \gamma_w = 9.81\frac{kN}{m^3} = 62.4\frac{lb}{m^3},$

$\frac{P_1}{\gamma} + z_1 + \frac{v_1^2}{2g} + H_P = \frac{P_2}{\gamma} + z_2 + \frac{v_2^2}{2g} + h_f + h_L, \frac{P_1}{\gamma} + z_1 + \frac{v_1^2}{2g} - H_T = \frac{P_2}{\gamma} + z_2 + \frac{v_2^2}{2g} + h_f + h_L$

$\sum F_x = (\sum\rho Q V_x)_{out} - (\sum\rho Q V_x)_{in}, \sum F_y = \left(\sum\rho Q V_y\right)_{out} - \left(\sum\rho Q V_y\right)_{in}, \alpha = \frac{1}{v^2}\frac{\int v^3\,dA}{\int v dA}, \beta = \frac{1}{v}\frac{\int v^2\,dA}{\int v dA}$

$h_f = f\frac{L}{d}\frac{v^2}{2g}, f_{PRACT} = \frac{16}{R_e}, h_f = kQ^2 = \frac{fLQ^2}{12.1d^5}, v_* = \sqrt{\frac{\tau_o}{\rho}} = v\sqrt{\frac{f}{8}}, IR = \frac{\rho V d}{\mu} = \frac{vd}{\vartheta} = \frac{4Q}{\pi DV}, h_f = \frac{32\,\mu L v}{\gamma d^2}, \tau = \rho k^2 y^2 (\frac{dv}{dy})^2, \epsilon = \rho l^2\frac{dv}{dy}, l = ky, \tau_o = \frac{\gamma R_h h_f}{L} = \gamma R_h S_0, \tau = \frac{\gamma h_f}{2L}r, K = \frac{1}{12.1}f\frac{L}{d^5}, \tau = \epsilon\frac{dv}{dy}, \tau = -\rho\overline{V_x V_y}, R_h = \frac{A}{P}, f = \frac{1.325}{[\ln\left(\frac{e}{3.7d} + \frac{5.74}{IR^{0.9}}\right)]^2}, \frac{v}{v_*} = 5.75log\frac{v_x y}{v} + 5.5, , \frac{v}{v_*} = 5.75log\frac{R}{e} + 4.75, d = 0.169(f)^{\frac{1}{5}}, Re = \frac{0.00568}{d \times 10^{-6}}, h_l = k\frac{v^2}{2g}, f_{TH} = \frac{16}{R_e}, f_{TH} = \frac{0.079}{R_e^{0.25}}, h_f = 4f\frac{L}{d}\frac{v^2}{2g}$

$Q = CA\sqrt{R_h S_0}, Fr = \frac{V}{\sqrt{gD}}, Q = \frac{1}{n}A R^{2/3} S_o^{1/2}, A = (b + zy)y, P = b + 2y\sqrt{Z^2 + 1}, T = b + 2zy, E = y + \frac{V^2}{2g}, y_c = \sqrt[3]{\frac{q^2}{g}}, E_C = \frac{3}{2}y_c, \frac{Q^2}{g} = \frac{A^3}{T}, q = \frac{Q}{B}, Fr = \frac{V}{\sqrt{gD}} = \frac{Q}{\sqrt{g \times \frac{A^3}{T}}}, v_c = \frac{Q}{A_c} = \frac{q}{y_c}, g = 9.81\frac{m}{sec^2} = 32.2\frac{ft}{sec^2}$

$\frac{y_1}{y_2} = \frac{1}{2}\left[\sqrt{1 + \frac{8v_2^2}{gy_2}} - 1\right] = \frac{1}{2}\left[\sqrt{1 + 8Fr_2^2} - 1\right], \frac{y_2}{y_1} = \frac{1}{2}\left[\sqrt{1 + \frac{8v_1^2}{gy_1}} - 1\right] = \frac{1}{2}\left[\sqrt{1 + 8Fr_1^2} - 1\right], \Delta E = E_1 - E_2$

$Q_{act} = \frac{2}{3} \times C_d \times \sqrt{2g} \times bH^{\frac{3}{2}}, Q_{act} = \frac{8}{15} \times C_d \times \sqrt{2g} \times tan\frac{\theta}{2}H^{\frac{5}{2}}, Q_{act} = C_d \times b\sqrt{\left(\frac{2}{3}E\right)^3 g}, \frac{dQ}{Q} = \frac{3}{2} \times \frac{dH}{H}$

SOLUTION OF THE QUESTIONS

Q1: Solution:

Q1: Solution

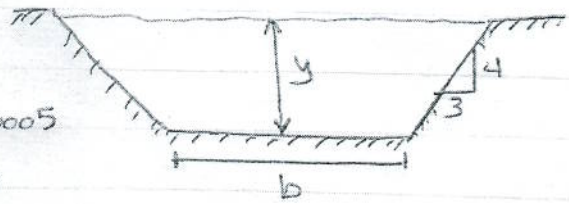

Given:

$z = \frac{3}{4}$, $S_o = \frac{1}{2000} = 0.0005$

$Q = 0.5\ m^3/s$, $C = 80$

Trapezoidal optimum dimensions

boundary conditions

$\frac{b + 2zy}{2} = y\sqrt{z^2+1}$ & $R_h = \frac{d}{2}$

$\frac{b + 2 \times 0.75y}{2} = y\sqrt{0.75^2+1} \Rightarrow b = y$

$A = (b + zy)y = (y + 0.75y)y = 1.75y^2$

$Q = C\ A\sqrt{R_h\ S_o}$

$0.5 = 80 \times 1.75y^2\sqrt{0.5y \times 0.0005}$

$= 2.2136\ y^{5/2}$

$\therefore y = 0.55\ m = b$

Circular Section - Maximum velocity

boundary conditions:

$\theta = 128.75^\circ$, $R = 0.305d$, $y = 0.81d$

$\theta = 2.246$ rad

$A = r^2(\theta - \frac{\sin 2\theta}{2}) = r^2(2.246 - \frac{\sin 2 \times 128.75}{2})$

$= 2.488\ r^2 = 0.622\ d^2$

$Q = C\ A\sqrt{R_h\ S_o}$

$0.5 = 80 \times 0.622d^2\sqrt{0.305d \times 0.0005}$

$0.5 = 0.6145\ d^{5/2} \Rightarrow d = 0.92\ m$

$\therefore$ actual depth of flow $= 0.81d = 0.81 \times 0.92 = 0.745\ m$

Q2:

a) **Solution:**

Q2: a: Solutions

Given:

$D = 0.3\,m$, $V = 0.2\,m/s$

$P_A = 34.335\,N/cm^2$, $P_B = 29.43\,N/cm^2$

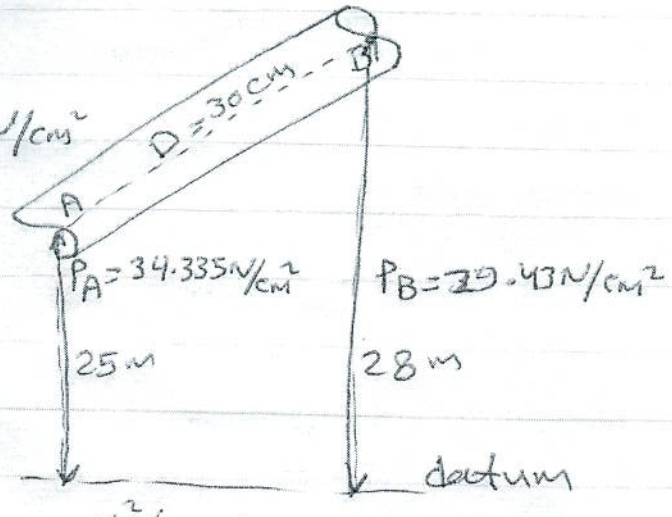

$Q = V \times A$

$= 0.2 \times \frac{\pi}{4} \times 0.3^2$

$= 0.0141\,m^3/s$

$$\frac{P_A}{\gamma} + z_A + \frac{V_A^2}{2g} = \frac{P_B}{\gamma} + z_A + \frac{V_B^2}{2g} + h_L$$

$$\frac{34.335 \times 10^4}{9810} + 25 = \frac{29.43 \times 10^4}{9810} + 28 + h_L$$

$$35 + 25 = 30 + 28$$

$\therefore h_L = 2\,m$

Direction of flow from high head to low head from A (35m) to B (30m)

b) **Solution:**

Q2: b) Solution:

Given:

$b = 50\ cm$, $Q = 40\ L/s$, $dH = 2mm$, $C_d = 0.6$

$$Q = \frac{2}{3} C_d L \sqrt{2g}\ H^{3/2}$$

$$0.04 = \frac{2}{3} \times 0.6 \times 0.5 \times \sqrt{2 \times 9.81}\ H^{3/2}$$

$$0.04 = 0.886\ H^{3/2}$$

$$0.0451 = H^{3/2} \Longrightarrow H = 0.126\ m$$

$$\frac{dQ}{Q} = 1.5 \frac{dH}{H} = 1.5 \times \frac{0.002}{0.126} \times 100 = 2.38\%$$

Q3: Solution:

Q3: Solutions

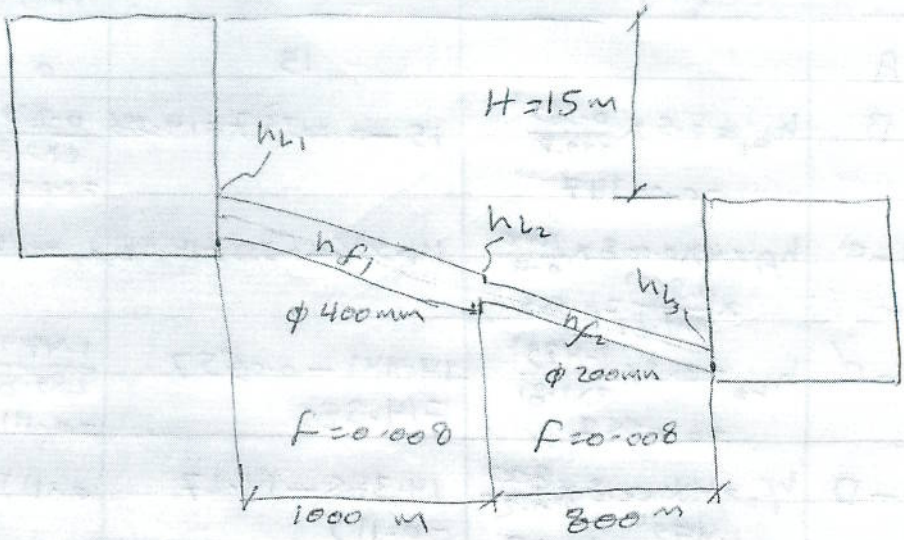

Given:

$D_1 = 0.4\,m$, $D_2 = 0.2\,m$

$L_1 = 1000\,m$, $L_2 = 800\,m$

$f_1 = 0.008$, $f_2 = 0.008$

$$h_{f_1} = 4f \frac{L}{D} \frac{V_1^2}{2g}$$

$$= 4 \times 0.008 \times \frac{1000}{0.4} \times \frac{V_1^2}{2g} = 4.077 V_1^2 = 0.254 V_2^2$$

$$h_{f_2} = 4 \times 0.008 \times \frac{800}{0.2} \times \frac{V_2^2}{2g} = 6.524 V_2^2$$

$$h_{L_1} = 0.5 \frac{V_1^2}{2g} = 0.025 V_1^2 = 0.00156 V_2^2$$

$$h_{L_2} = 0.5 \frac{V_2^2}{2g} = 0.025 V_2^2$$

$$h_{L_3} = \frac{V_2^2}{2g} = 0.051 V_2^2$$

$$V_1 d_1^2 = V_2 d_2^2 \Rightarrow V_1 \times 0.4^2 = V_2 \times 0.2^2 \Rightarrow V_1 = 0.25 V_2$$

$$15 = 0.254 V_2^2 + 6.524 V_2^2 + 0.00156 V_2^2 + 0.025 V_2^2 + 0.051 V_2^2$$

$$15 = 6.855 V_2^2 \Rightarrow V_2 = 1.479\,m/s \;\&\; V_2 = 0.369\,m/s$$

$$Q = V_1 \times A_1 = 0.369 \times \frac{\pi}{4} \times 0.4^2 = 0.046346\,m^3/s$$

$$= 46.346\,l/s$$

	head lost (m)	Energy line (m)	$\frac{V^2}{2g}$ (m)	H.G.L
1		15	0	15
3	$h_{L_1} = 0.5 \times \frac{0.369^2}{2 \times 9.81}$ $= 0.00347$	$15 - 0.00347 = 14.996$	$\frac{0.369^2}{2 \times 9.81}$ $= 0.00694$	$14.996 - 0.00694$ $= 14.989$
C	$h_{f_1} = 4 \times 0.008 \times \frac{1000}{0.4}$ $\times \frac{0.369^2}{2 \times 9.81} = 0.555$	$14.996 - 0.555 = 14.441$	0.00694	$14.441 - 0.00694$ $= 14.434$
C'	$h_{L_2} = 0.5 \times \frac{1.479^2}{2 \times 9.81}$ $= 0.0557$	$14.441 - 0.0557$ $= 14.385$	$\frac{1.479^2}{2 \times 9.81}$ $= 0.111$	$14.385 - 0.111$ $= 14.274$
D	$h_{f_2} = 4 \times 0.008 \times \frac{800}{0.2}$ $\times \frac{1.479^2}{2 \times 9.81} = 14.27$	$14.385 - 14.27$ $= 0.115$	0.111	$0.115 - 0.111$ $= 0.005$

Q4:

a) **Solution:**

Q4: a) Solution:

Given:

$\gamma_{Concrete} = 23.6\ KN/M^3$

$\mu_0 = 0.42$

$F.S_{sliding} = 1.5$

$W_{Concrete} = \gamma \times Volume = 23.6 \times (b \times 6 \times 1) = 141.6\,b$

$F_w = \gamma\, h_c A = 9.81 \times 2.5 \times (5 \times 1) = 122.625\ KN \longrightarrow$

$F.S_{sliding} = 1.5 = \dfrac{0.42 \times 141.6b}{122.625} \Rightarrow b = 3.093\ m$

for overturning:

$$F.S_{O.T} = \frac{W_{conc.} \times \frac{b}{2}}{F_w \times \frac{h}{3}} = \frac{141.6 \times 3.093 \times \frac{3.093}{2}}{122.625 \times \frac{5}{3}}$$

$= 3.314 > 1$

$\therefore$ The concrete wall is safe against Overturning.

b) **Solution:**

Q4: b) Solution

$L = 8m$, $b = 7m$ depth $= 3m$

$W_1 = 588.6\,KN$

$\phi = 4m$ & $W_2 = 392.4\,KN$

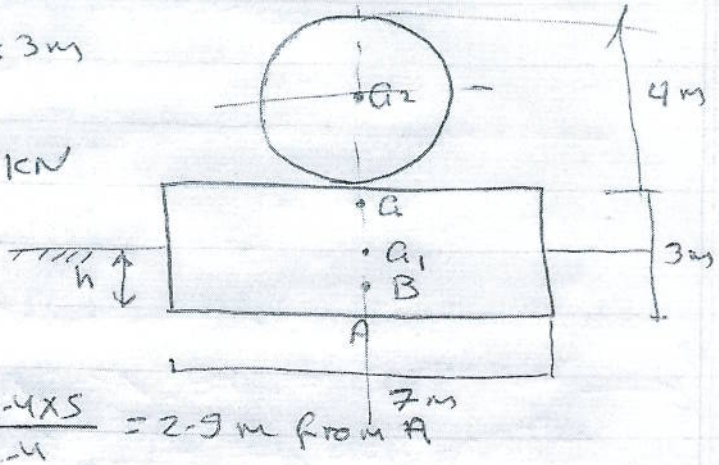

$AG_1 = \frac{3}{2} = 1.5m$

$AG_2 = 3 + \frac{4}{2} = 5m$

$C.C.G = \frac{588.6 \times 1.5 + 392.4 \times 5}{588.6 + 392.4} = 2.9\,m$ from A

let h = depth of immersion

Total weight of pontoon & boiler = weight of sea-water displaced

$588.6 + 392.4 = 10104 \times 8 \times 7 \times h$

$h = 1.733\,m$

$AB = \frac{1.733}{2} = 0.866\,m$

$BG = AG - AB = 2.9 - 0.866 = 2.034\,m$

$I = \frac{bd^3}{12} = \frac{8 \times 7^3}{12} = 288.667\,m^4$

$\frac{I}{V} = \frac{288.667}{8 \times 7 \times 1.733} = 2.356\,m$

$GM = \frac{I}{V} - BG = 2.356 - 2.034 = 0.322 > 0$

Case 1

Q5: Solution:

Q5: Solution

Given:

a) $D = 0.1\,m$, $L = 1000\,m$, $\mu = 0.85\ N.S/m^2$, $S.G = 0.92$, $Q = 1.2\,m^3/min$

$\eta_p = 0.65$

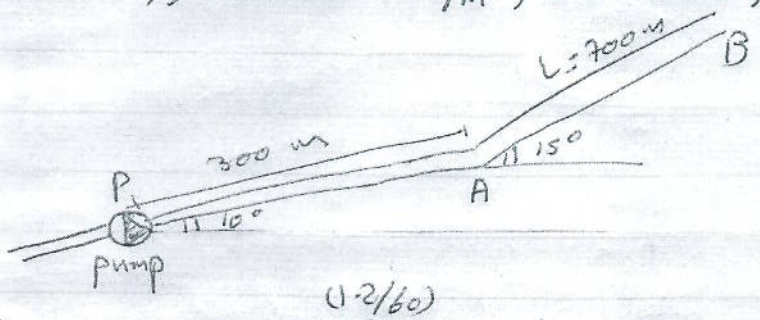

$$Re = \frac{\rho V D}{\mu} = \frac{0.92 \times 1000 \times \frac{(1.2/60)}{\frac{\pi}{4} \times 0.1^2} \times 0.1}{0.85} = 275.6$$

Since $Re < 2000$, therefore, the flow is Laminar.

b) Pressure to be develop by the pump, P:

Height of the end B of the pipe line above the pump center P $= 300 \sin 10 + 700 \sin 15 = 233.26\,m$

the friction factor, for Laminar

$$f = \frac{64}{Re} = \frac{64}{275.6} = 0.2322$$

$$h_f = f \frac{L}{D} \frac{V^2}{2g} = 0.2322 \times \frac{1000}{0.1} \times \frac{2.546^2}{2 \times 9.81} = 767.15\,m$$

$$\frac{P_P}{\gamma} + z_P + \frac{V_P^2}{2g} = \frac{P_B}{\gamma} + z_B + \frac{V_B^2}{2g} + h_f$$

$$\frac{P_P}{\gamma} + 0 + \frac{V_P^2}{2g} = 0 + 233.26 + \frac{V_B^2}{2g} + 767.15$$

$$\frac{P_P}{\gamma} = 1000.41 \Rightarrow P = 1000.41 \times 0.92 \times 9.81 = 9028.9\ KN$$

Power of the driving motor $(P) = \frac{\gamma Q H_P}{\eta_P} = \frac{\gamma Q P_P}{\gamma \eta_P}$

$$= \frac{(1.2/60) \times 9028.9}{0.65} = 277.8\ KW$$

Q6:

a) **Solution:**

Q6: a): Solution:

Given:

$d_1 = 0.2\,m$, $d_2 = 0.1\,m$, $S_o = 0.9$, $S_m = 13.6$, $C_d = 0.98$

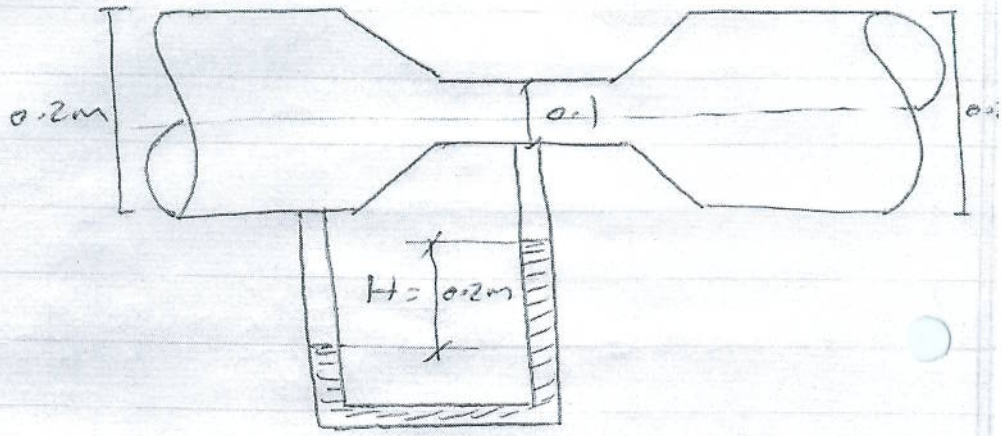

$a_1 = \frac{\pi}{4} 0.2^2 = 0.0314\,m^2$, $a_2 = \frac{\pi}{4} \times 0.1^2 = 0.00785\,m^2$

$h = x\left[\frac{S_m}{S_o} - 1\right] = 0.2\left[\frac{13.6}{0.9} - 1\right] = 2.822\,m$ of oil

$$Q = C_d \frac{a_1 a_2}{\sqrt{a_1^2 - a_2^2}} \sqrt{2gh}$$

$$= 0.98 \frac{0.0314 \times 0.00785}{\sqrt{0.0314^2 - 0.00785^2}} \sqrt{2 \times 9.81 \times 2.822}$$

$= 0.059129\,m^3/s = 59.129\,l/s$

b) **Solution:**

Q6: b) Solution

Buckingham's method

1) $0 = f(R, L, V, \rho, \nu)$

2) $R = MLT^{-2}$, $L = L$, $V = LT^{-1}$, $\rho = ML^{-3}$, $\nu = L^2T^{-1}$

3) No. of $\pi = n - m = 5 - 3 = 2$

$f(\pi_1, \pi_2) = 0$

4) Repeating variable & equations:

$\pi_1 = \rho^{a_1} V^{b_1} L^{c_1} R$

$\pi_2 = \rho^{a_2} V^{b_2} L^{c_2} \nu$

5) First Term:

$M^0L^0T^0 = (ML^{-3})^{a_1} (LT^{-1})^{b_1} (L)^{c_1} MLT^{-2}$

power of:

M: $0 = a + 1 \Longrightarrow \boxed{a_1 = -1}$

L: $0 = -3a_1 + b_1 + c_1 + 1 = -3\times -1 - 2 + c_1 + 1 \Longrightarrow \boxed{c_1 = -2}$

T: $0 = -b_1 - 2 \Longrightarrow \boxed{b_1 = -2}$

$\pi_1 = \rho^{-1} V^{-2} L^{-2} R \Longrightarrow \pi_1 = \dfrac{R}{\rho V^2 L^2}$

6) Second Term:

$M^0L^0T^0 = (MLT^{-3})^{a_2} (LT^{-1})^{b_2} (L)^{c_2} L^2 T^{-1}$

power of

M: $0 = a_2 \Longrightarrow \boxed{a_2 = 0}$

L: $0 = -3a_2 + b_2 + c_2 + 2 = 0 - 1 + c_2 + 2 \Longrightarrow \boxed{c_2 = -1}$

T: $0 = b_2 - 1 \Longrightarrow \boxed{b_2 = -1}$

$\pi_2 = \rho^0 \cdot V^{-1} L^{-1} \nu \Longrightarrow \pi_2 = \dfrac{\nu}{VL}$

7) $f(\pi_1, \pi_2) = f\left(\dfrac{R}{\rho V^2 L^2}, \dfrac{\nu}{VL}\right) = 0$

$\therefore R = \phi \rho V^2 L^2 \left(\dfrac{VL}{\nu}\right)$ O.K

Rayliegh's Methods

1) $R = K L^a V^b \rho^c \nu^d$

2) $R = MLT^{-2}$, $L = L$, $V = LT^{-2}$, $\rho = ML^{-3}$

$\nu = L^2T^{-1}$

3) $MLT^{-2} = K L^a (LT^{-1})^b (ML^{-3})^c (L^2T^{-1})^d$

4) power of:

M: $1 = c \Longrightarrow \boxed{c = 1}$

L: $1 = a + b - 3c + 2d = a + 2d - d - 3 + 2d = a - 1 + d$

$\boxed{a = 2 - d}$

T: $-2 = -b - d \Longrightarrow \boxed{b = 2 - d}$

$R = K L^{2-d} V^{2-d} \rho \nu^d$

$= K L^2 L^{-d} V^2 V^{-d} \rho \nu^d$

$= K (L^2 V^2 \rho) \left(\frac{\nu}{VL}\right)^d$

$R = \phi (L^2 V^2 \rho) \left(\frac{\nu}{VL}\right)$ o.k

كلية / موانع

جامعة بغداد | مختبر ميكانيك الموائع | التاريخ 30-5-2013

كلية الهندسة | الامتحان النهائي - الدور الاول | الزمن :ساعة

قسم الهندسة المدنية

س1:- اجب عن احد الفرعين-:

ا- ما انواع الجريان في تجربة معامل الاحتكاك في الانابيب وما الفرق بينهما؟ وكيف يتم الحصول عليهما؟

ب- ما مقياس الانبوب الضيق لفنشوري في حاله استعماله لقياس تصريف مقداره $0.4\ m^3/s$ لانبوب قطره 0.6 m اذا كان فرق الضغط 0.8 m ومعامل التصريف 0.9؟

س2:- في تجربة القفزة الهيدروليكية , ما المقصود ب F وما فائدة حسابه مع ذكر المعادلة؟

س3:- ما سبب استعمال كلا مما يلي:- (اجب عن خمسة فقط)

1- الابرة في تجربة الاجسام المغمورة.
2- المانوميتر في تجربة بوابة الكسح.
3- الخطاف في تجربة السد الغاطس.
4- انبوب التهوية في تجربة مقياس فنشوري.
5- المصفى في تجربة الفتحة الحادة.
6- ثقل متحرك قيمته 610 لة في تجربة البثق.

س4:- اكمل العبارات الاتية:- (اجب عن خمسة فقط)

1. السد الغاطس هو ----------.
2. الغرض من اجراء تجربة الكسح ----------.
3. من العوامل المؤثرة على معامل الاحتكاك للانابيب في حالة الجريان المضطرب هي ----------و----------.
4. من التطبيقات العملية لتجربة الاجسام المغمورة----------و----------.
5. فائدة pitot tube في تجربة الفتحة الحادة هي ----------.
6. مقياس فنشوري هو جهاز لقياس ----------.

مع تمنياتي بالنجاح